

PUMPLINE 1/2
OUTLET MANHOLE-PLAN-1:50

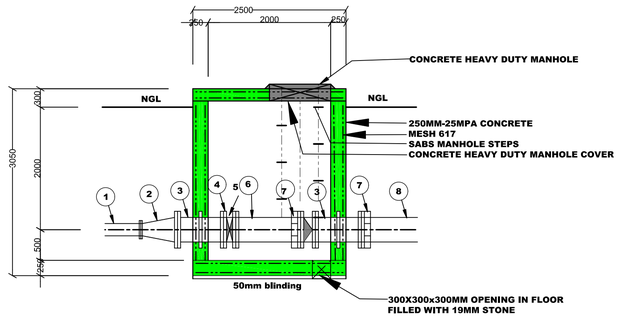

PUMPLINE 1/2
OUTLET MANHOLE -SECTION-1:50

LEGEND		
ITEM	DESCRIPTION	QUANT
1	EXISTING 200MM STEEL PIPE	1
2	400-200MM FLANGED REDUCER	1
3	400MM FLANGED PUDDLE PIPE	2
4	MAIN ISOLATION VALVE DN400 PN16 RESILIENT-SEATED GATE/BUTTERFLY VALVE	1
5	NON-RETURN/CHECK VALVE DN400 PN16	1
6	400MM VJ ADAPTOR	2
7	ONE ENDED FLANGED PIPE	1
8	400MM HDPE PN 16 MAIN PIPE WITH WELDED JOINTS	1

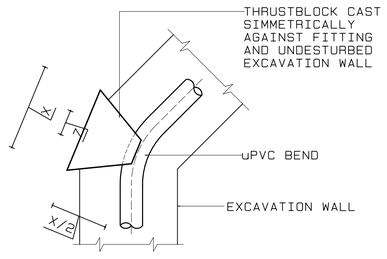

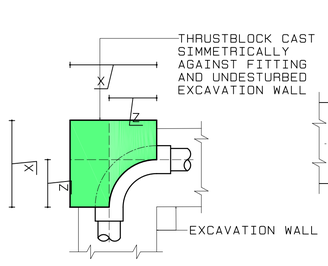

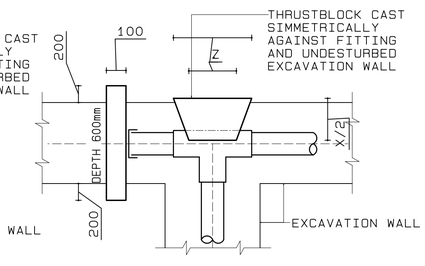

BEND	X	Z	DEPTH
400mm	2000	500	1600
300mm	1500	375	1200
225mm	1125	350	900
200mm	1000	325	800
150mm	750	275	600
100mm	500	175	400
75mm	375	125	300
50mm	250	75	200

BEND	X	Z	DEPTH
400mm	3000	750	1750
300mm	2250	575	1300
225mm	1890	500	1000
200mm	1640	475	900
150mm	1210	400	700
100mm	740	250	500
75mm	530	175	400
50mm	330	125	300

T-PIECE	X	Z	DEPTH
400mm	2600	750	1600
300mm	1950	550	1200
225mm	1475	425	900
200mm	1300	350	800
150mm	1000	275	600
100mm	650	200	400
75mm	500	150	300
50mm	325	100	200

NOTE: SUPPLY POLYETHYLENE MEMBRANE BETWEEN CONCRETE AND FITTING

TYPICAL THRUST BLOCK DETAILS
(N.T.S)

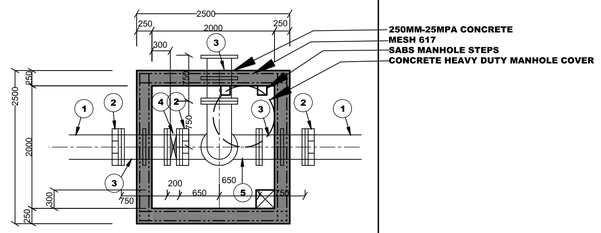

PUMPLINE 1/2
SCOUR MANHOLE PLAN-1:50

LEGEND		
ITEM	DESCRIPTION	QUANT
1	400MM HDPE PN 16 MAIN PIPE WITH WELDED JOINTS	1
2	400MM VJ ADAPTOR	2
3	400MM FLANGED PUDDLE PIPE	3
4	MAIN ISOLATION VALVE DN400 PN16 RESILIENT-SEATED GATE/BUTTERFLY VALVE	2
5	400MM FLANGED TEE PIPE	1
6	90 DEGREE 400MM BEND	1

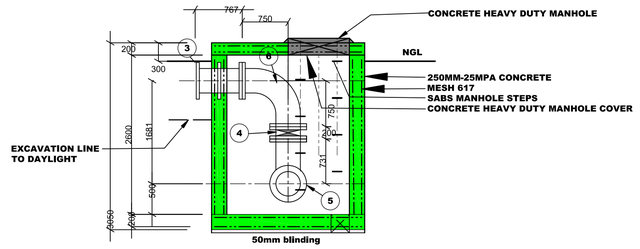

PUMPLINE 1
SCOUR MANHOLE SECTION-1:50

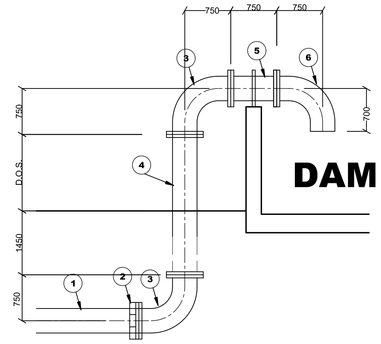

PUMPLINE 1& 2
DAM OUTLET-1:50

ITEM	DESCRIPTION	QUANT
1	400MM HDPE PN 16 MAIN PIPE WITH WELDED JOINTS	1
2	400MM VJ ADAPTOR	1
3	400MM FLANGED 90 DEGREE BEND	2
4	400MM FLAGED PIPE	1
5	400MM FLANGED PUDDLE PIPE	1
6	400MM ONE END FLANGED T90 DEGEE BEND	1

For Tender Purpose Only

AMENDMENDS

No	Date	By	

Client:
TSWELOPELE LOCAL MUNICIPALITY

Project:
THE REPLACEMENT OF OLD ASBESTOS PIPELINE AND ACCOMPANYING APPURTENANCES IN PHAHAMENG (BULTFONTEIN)

Drawing:
MANHOLES
PLAN 1 OF 2

Date:	Scale:
JUNE 2026	AS SHOWN

PULE RAMASIMONG DEVELOPMENT CONSULTANTS
ENGINEERING CONSULTANTS, PROJECT MANAGERS AND COMMUNITY DEVELOPMENT CONSULTANTS
6 DELAHARPE STREET
WILKOPPIES
KLERKSDORP, 2570
TEL:+27 18 462 1575
FAX: +27 18 462 1518
EMAIL:pule@prdcon.co.za

Designed By:		PR	
Drawn By:		SM	
Checked By:		PR	

PRDC-26-07-26-MHLS-PL1
Drawing No.
Contract No. PRDC-26-07